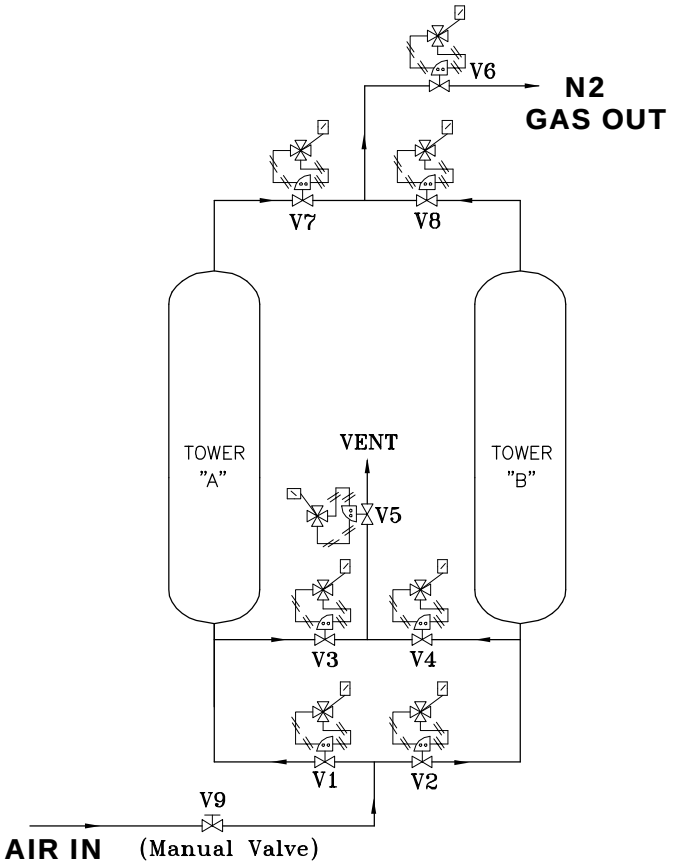

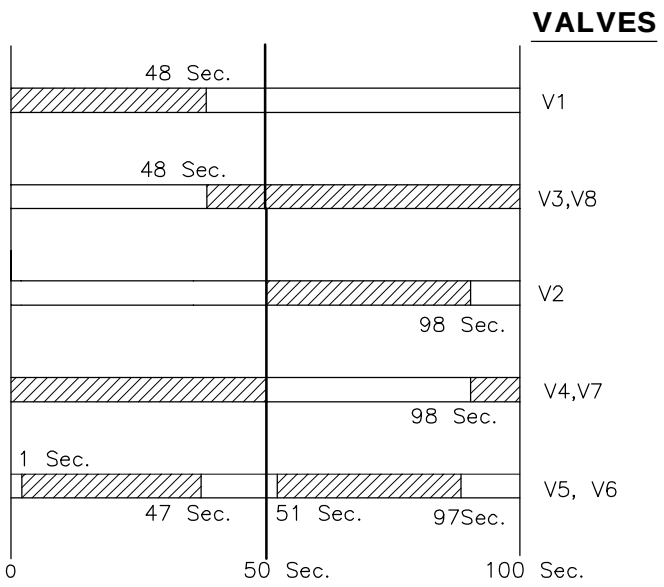

NOTE :-

1) ▨ SHOWS VALVE OPEN, SOLENOID VALVE ENERGISED.

TITLE:– PLC SEQUENCE CHART FOR N2 - PSA UNIT				REV.	DATE
				00	12.12.08
				01	14.01.09
MVS JOB No.	DRAWN BY	CHKD BY	DRAWING NO.	02	
5659	MS		MVS–5659–17277–01	03	

MVS Engineering Limited
E–24 EAST OF KAILASH ,NEW DELHI–110065,INDIA

This drawing is the property of MVS Engineering Limited & should be used only in reference to contracts or proposals of the company Reproduction of this drawing or unauthorised use is prohibited.

PDF created with pdfFactory trial version www.pdffactory.com